KREBS
TELL6000

Removable Casters

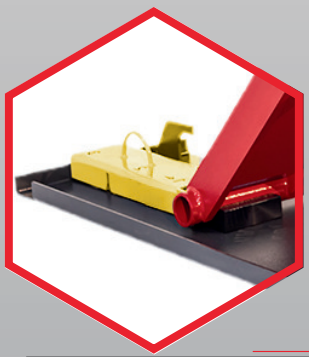

Multi-Height Locking

Easily Mobile

All Included

TELL6000 Mid-Rise Scissor Lift

Compact Power, Elevated Performance

The TELL6000 is our smooth and reliable 6,000 lb. mid-rise scissor lift, engineered for versatility and space-saving efficiency. Ideal for tire shops, detailers, collision repair centers, and home garages, this lift combines compact footprint design with serious lifting capability. Whether you're working in a tight bay or maximizing a small workspace, the TELL6000 delivers the access and clearance you need—without the need for a full-size lift.

Flexible Lifting, Streamlined Workflow

Designed for quick service jobs and everyday vehicle maintenance, the TELL6000 features a wide, drive-over platform for easy vehicle positioning and fast lift times that keep productivity high. Its low-profile design and portable power unit make it easy to move and reposition, while automatic safety locks and durable rubber lifting blocks ensure every lift is stable and secure. Whether you're working on sedans, SUVs, or light-duty trucks, this lift makes access simple and setup seamless.

Durability That Delivers

Built to last and ready to perform, the TELL6000 features heavy-duty steel construction and industrial-grade hydraulics, standing up to daily use with minimal maintenance. It's powder-coated for corrosion resistance and designed to operate indoors or outdoors. For professionals and DIYers alike, the TELL6000 is the perfect balance of strength, safety, and space-conscious design—making it a smart choice for any shop or garage looking to do more with less.

TECHNICAL SPECS

LIFTING CAPACITY	6,000 LBS
VOLTAGE	208V SINGLE PHASE
FREQUENCY	60HZ
POWER	3HP (2206.5W)
OIL VOLUME	1.32 GALONS
ISOLATION CLASS	IP 54
CABINET TYPE	B14
RISING TIME**	30 SEC
LOWERING TIME	27 SEC
WEIGHT	881.8 LBS
ANCHORS FOR CONCRETE*	3/8" x 2 1/2"

*OPTIONAL ITEM
** RISING TIME MAY VARY ACCORDINGLY WITH LOCAL CONDITIONS

KEY DIMENSIONS

A - HEIGHT (MAX ELEVATION)	39"
B - HEIGHT (LOWERED)	4-5/ 16"
C - PLATFORM (C-C)	54-7/8"
D1 - PLATFORM WIDTH	17-5/8"
D2 - DISTANCE BETWEEN PLATFORMS	37-3/16"
E - TOTAL WIDTH	72-3/4"
F - BASE LENGTH	61-3/4"
G - SLOPE	17°"
H1 - PLATFORM LENGTH	79-7/8"
I - TOTAL LENGTH	81-1/2"
J - CLEARANCE BETWEEN WHEELS	79"
K - HEIGHT	39-1/2"
L - DEPTH	17-5/8"
M - WIDTH	13"

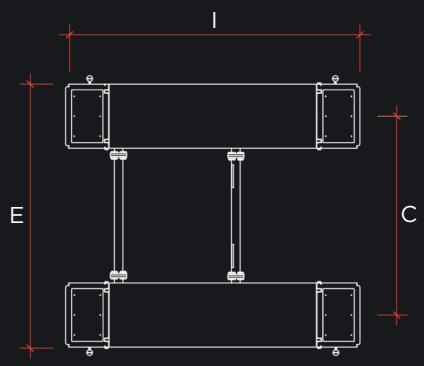

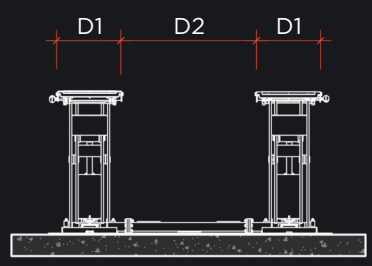

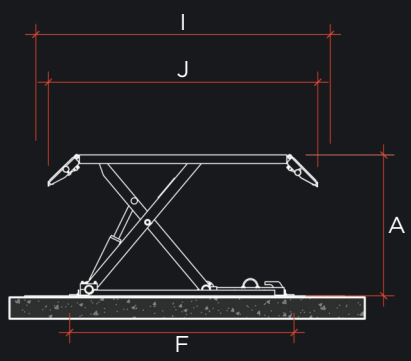

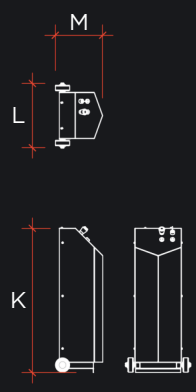

Visit our website to discover the complete range of our innovative products and find the perfect solution for you needs.

KREBS

CITY LA DBS
DEPARTMENT OF BUILDING AND SAFETY

INDEPENDENTLY TESTED AND VALIDATED
All CERTIFIED

www.KrebsIndustries.com

contact@krebsindustries.com

O: (904) 215-7327

@krebsindustries

1250 Imeson Park Blvd, Suite 201, Jacksonville, FL 32218